SPITFIRE ARMORY™
PRECISION FIREARM PRODUCTS

Ghost Ring MX Snub Front Sight Instructions

MOUNTING

The MX snub sight system is designed so that gun smithing should not be required. It is recommended to use "blue" Loctite on all screws. All screws for mounting are included. Loctite can be used under the sight base for extra holding strength. All testing was done without Loctite under the base so it is not required.

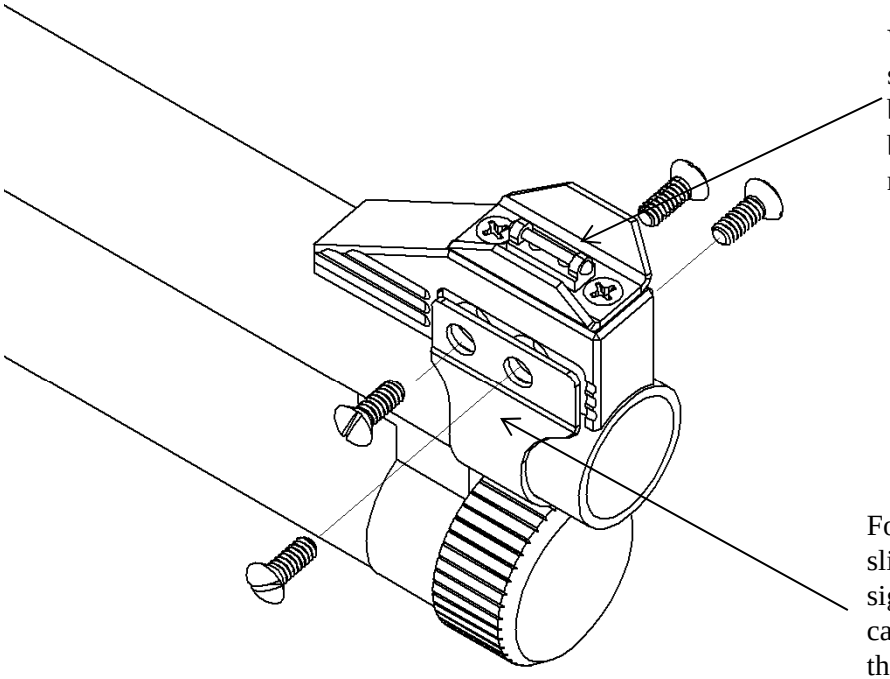

Visually line up the red fiber optic sight bead with the center line of the barrel. There is a cut out area on the bottom of the sight designed to make room for most sight beads

Assembly Tip! Start only one screw a few turns, then start only one screw on the other side. Then put in the third screw a few turn and then the last screw. Tighten each screw a bit at a time to keep everything centered.

For assembly the steel band clamp can be slid from the front of the barrel down to the sight mounting location. The band clamp can also be expanded and slipped between the barrel and magazine tube then bent closed for mounting behind the barrel bracket if desired.
Tighten screws until firm, **do not over-tighten**.

Front View

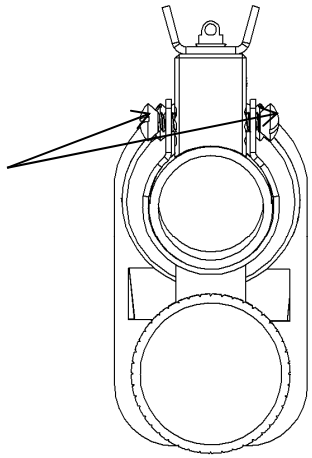

Questions? Contact us at orders@spitfirearmory.com or call 612-559-1395